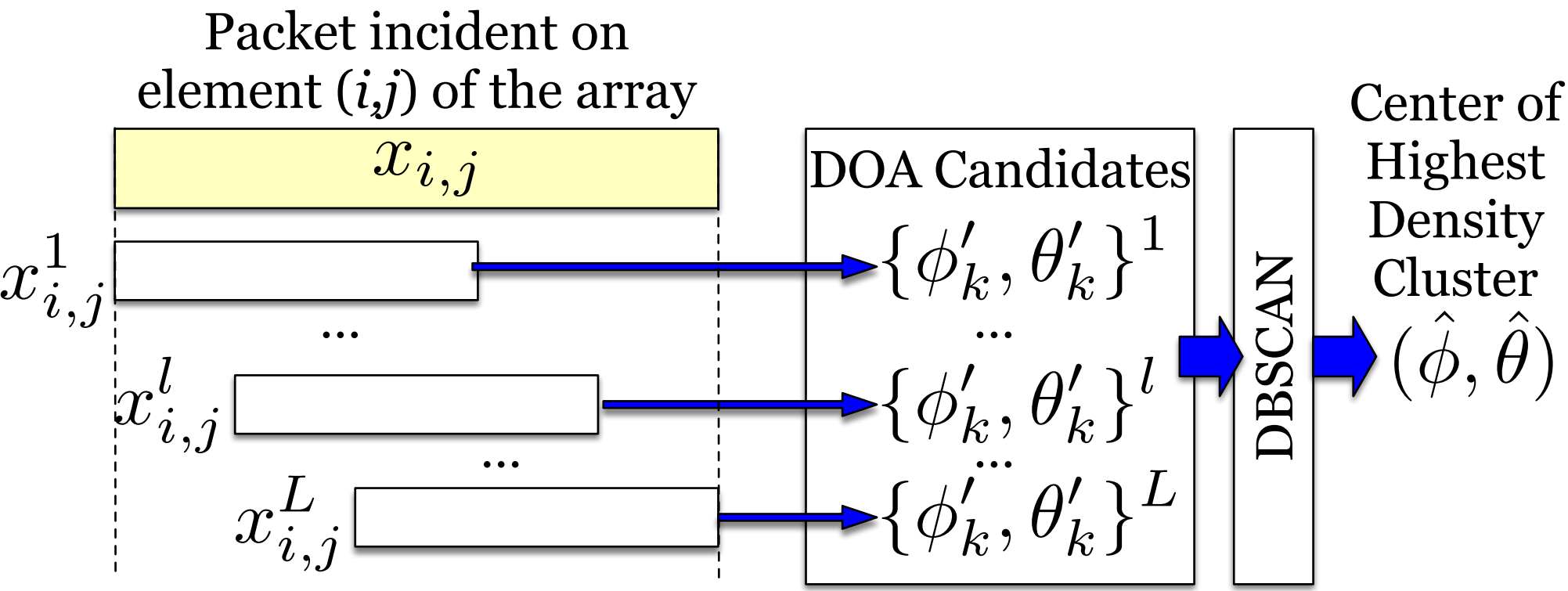
Packet incident on element (i,j) of the array
$x_{i,j}$
$x_{i,j}^1$
...
$x_{i,j}^l$
...
$x_{i,j}^L$
DOA Candidates
$\{\phi'_k, \theta'_k\}^1$
...
$\{\phi'_k, \theta'_k\}^l$
...
$\{\phi'_k, \theta'_k\}^L$
DBSCAN
Center of Highest Density Cluster
$(\hat{\phi}, \hat{\theta})$